Pump port flanges

RPA1-038

RPA2-012

RPA3-100

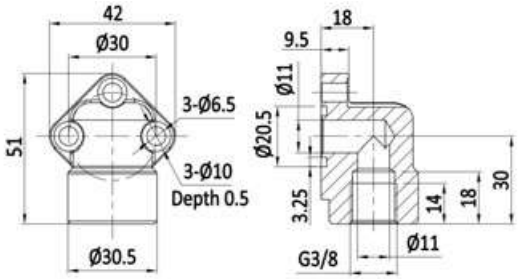

RPA1-038

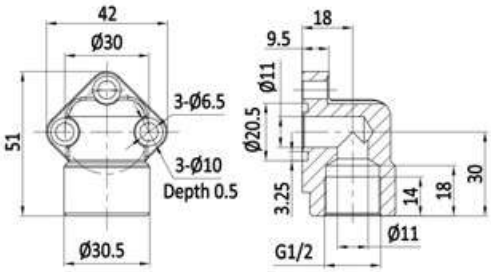

RPA1-012

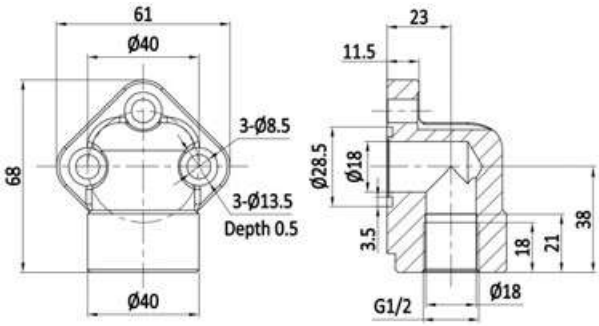

RAP2-012

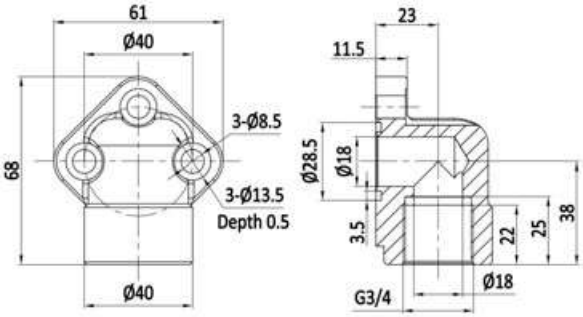

RPA2-034

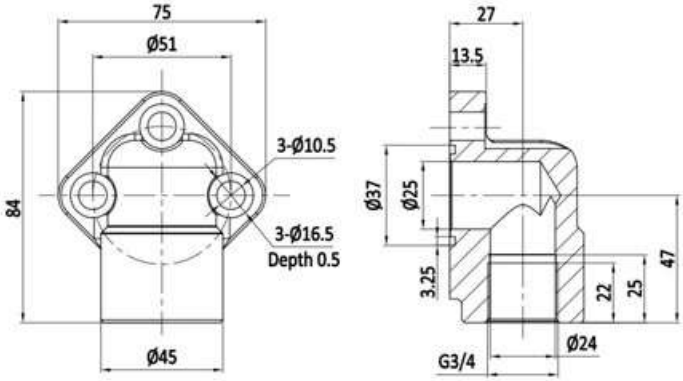

RPA3-034

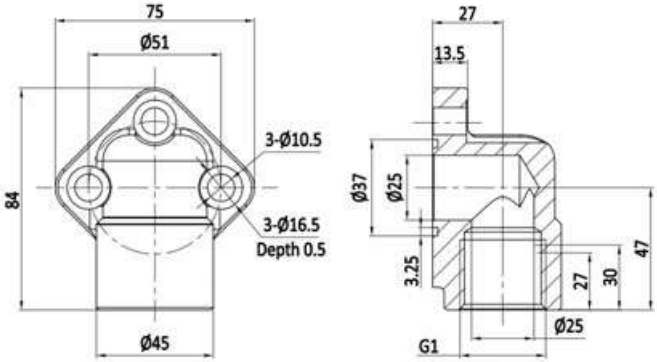

RPA3-100